Onderdelen voor

nÂ°	Artikel	Aantal gebruikt
1	991733 WASHER	1
2	316487 RETAINING RING FOR D11 SHAFT	1
3	331756 FIRST GEAR	1
4	331304 O-RING	1
5	930511 FEATHER KEY 4X4X10	1
6	330999 BEARING HOLDER ASS'Y	1
7A	328628 SEAL LOCK SCREW M4X12 (W/WASHER)	3
8	330967 PROTECTIVE COVER	1
9A	336975 RETURN SPRING (OLD 302442/330984)	1
10	330981 BUSHING	1
11	939548 RETAINING RING FOR D22 (10 PCS)	1
12	330985 WASHER (A)	1
14	330986 WASHER (B)	1
15	957749 BOLT M7X17.5 (W/WASHER)	1
16	331001 MACHINE SCREW M3	3
17	998426 NEEDLE ROLLER	1
18	330977 LEVER	1
19	325079 MACHINE SCREW M4X8 (W/SP. WASHER) BLACK	1
20	330973 SIDE HANDLE	1
21	962782 HEX.SOCKET SET SCREW M5X6	1
22A	337078 GEAR COVER (OLD 331024)	1
23A	337080 CUSHION NEW	1
24	949794 FLAT HD.SCREW M6X20 (10 PCS)	1
25	328922 HITACHI PLATE	1
26	935196 MACHINE SCREW (W/WASHERS) M4X12 (BLACK)	1
28	331006 RUBBER BUSHING	1
29	322089 BEARING BUSHING	1
30	608VVM BALL BEARING 608VVC2PS2L	1
31	315877 DUST SEAL	1
32	930703 BRUSH TERMINAL	2
33	340762E STATOR ASS'Y 220-230 VOLT	1
33	340762G STATOR ASS'Y 110 VOLT NEW	1
33	340762G STATOR ASS'Y 110 VOLT NEW	1
34	953174 HD.TAPPING SCREW D5X55 (OLD 956669)	2
35	330971 FAN GUIDE	1
36	360882E ARMATURE ASS'Y 220-230 VOLT	1
37	330976	1
38	990541 MACHINE SCREW (W/WASHERS) M5X16	3

HiKOKI

Onderdelen voor

nÂ°	Artikel	Aantal gebruikt
39	330982 SPRING (A)	1
40	6000VV BALL BEARING 6000VVCMPS2L	1
41	324660 KNOB	1
42	676531 O-RING (P-7)	1
43	319830 SLEEVE	1
44	963756Z SWITCH (2P PILLAR TYPE) W/SAFETY LOCK	1
44	302470 SWITCH (C) (1P SCREW TYPE) W/O LOCK	1
45	330969 HANDLE COVER	1
46	930804 TERMINAL M4.0 (10 PCS.)	2
47	930039 NOISE SUPPRESSOR	1
49	981373 TUBE (D)	2
50	937631 CORD CLIP	1
52	938051 CORD ARMOR D10.1	1
52	953327 CORD ARMOR D8.8	1
53	500461Z CORD 3M 2 X 1,0 H05VV-F W/PLUG 16A CEE FORM 2P+E FOR GBR	1
53	500435Z CORD 2,5M 2 X 1.0 H05VV-F W/PLUG 13A/250V GBR	1
53	500241Z CORD	1
55	301653 TAPPING SCREW (W/FLANGE) D4X20 (BLACK)	4
56	330995 HOUSING ASS'Y	1
57	322123	3
58	938477 HEX.SOCKET SET SCREW M5X8	2
59	957051 BRUSH HOLDER	2
60	999043 CARBON BRUSH (1 PAIR)	2
61	935829 BRUSH CAP	2
62	322260 SEAL LOCK SCREW M6X14 (W/SP WASHERS)	1
63	322600 LEVER (A) W/STOPPER	1
64	328048 LOCK NUT	1
65	320975 WASHER	1
66	308387 U-NUT M5	1
67	331003 MACHINE SCREW M4 (W/SP.WASHER)	1
68	324659 GUIDE PIECE	1
69	319541 SEAL LOCK HEX. SOCKET SET SCREW M5X6	1
70	330975 BEVEL PLATE	1
71	320163 STEP PIN D6X13	1
72	942808 BOLT (SQUARE) M6X20	1
73	322096 ADJUSTING SCREW (A)	1
74A	337081	1
75	303800 DIAGONAL BOLT M8	1

Onderdelen voor

nÂ°	Artikel	Aantal gebruikt
76	949432 BOLT WASHER M6 (10 PCS) (OLD 949432Z)	0
77	331513 BOLT (H) M6X10	0
78	330974 RIVING KNIFE	0
82	307947 WING BOLT M6X12	0
83	331761 MACHINE SCREW M5X12 (W/SP.WASHER) BLACK	0
84	330968 GUIDE RAIL ADAPTOR	0
85	330978 GUIDE RAIL PLATE	0
86	330979 GUIDE BAR	0
87	302469 SLOTTED HD.SET SCREW M6X6 (SEAL LOCK)	1
88	330980 GUIDE BAR	0
89A	337082 BASE	1
90	949425 WASHER M6 (10 PCS)	1
91	302459 WING BOLT M6X17	1
92	331004 BOLT M6X10	0
93	330972 CLAMP LEVER	0
94	330983 SPRING (B)	0
95	330998 GUIDE RAIL ASS'Y	0
96	980063 TERMINAL	2
97	305499 MACHINE SCREW (W/WASHER) M3,5X6	4
98	337084 GEAR COVER SET NEW	1
501	990666 HEX. BAR WRENCH 2.5MM	1
502	940543 BOX WRENCH 10MM	1
503	302756 GUIDE	1
601	997247 DUST COLLECTOR	0

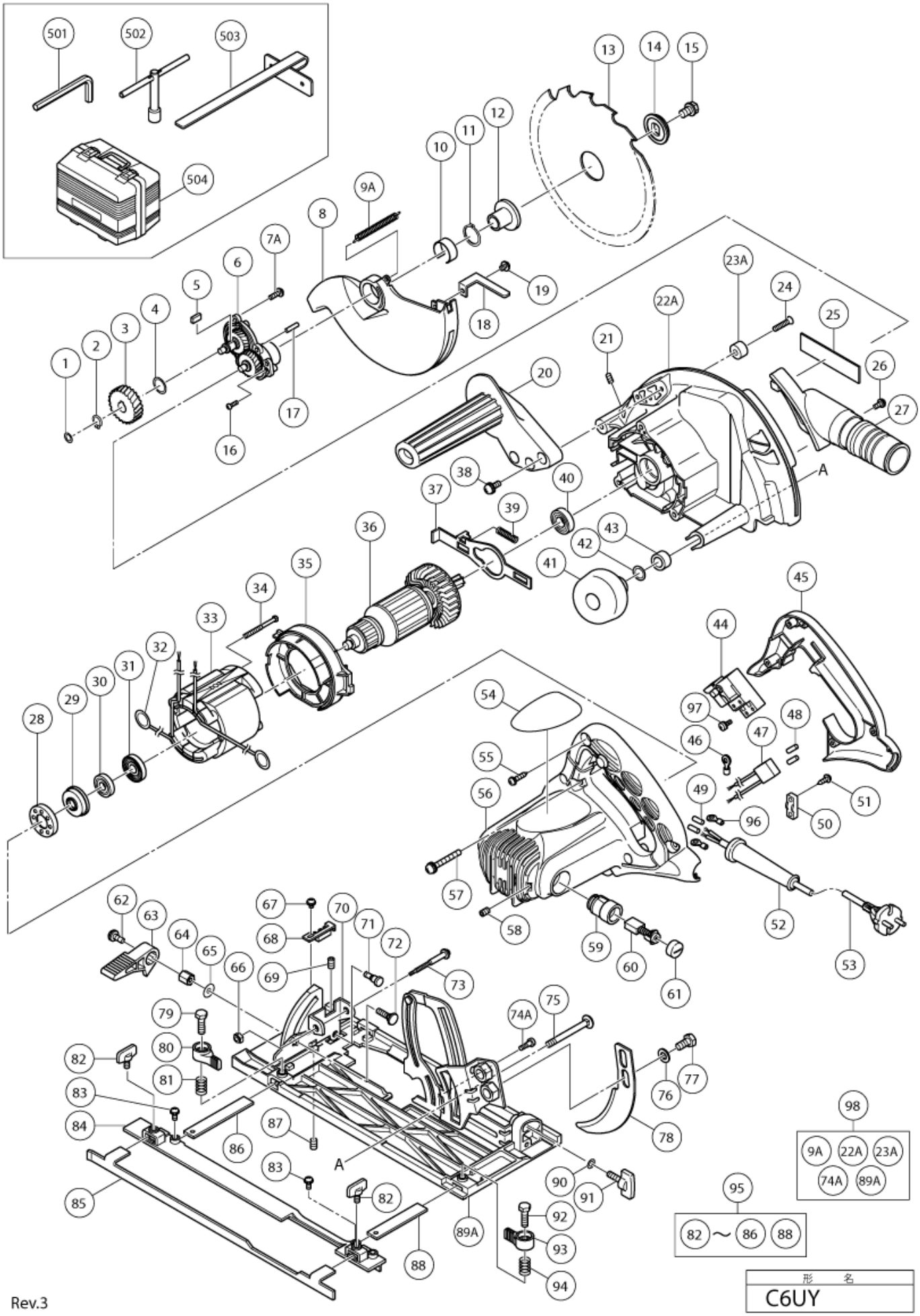
501
502
503
504
1
2
3
4
5
6
7A
8
9A
10
11
12
13
14
15
16
17
18
19
20
21
22A
23A
24
25
26
27
28
29
30
31
32
33
34
35
36
37
38
39
40
41
42
43
44
45
46
47
48
49
50
51
52
53
54
55
56
57
58
59
60
61
62
63
64
65
66
67
68
69
70
71
72
73
74A
75
76
77
78
79
80
81
82
83
84
85
86
87
88
89A
90
91
92
93
94
95
96
97
98
A
9A
22A
23A
74A
89A
82 ~ 86 88
形 名
C6UY
Rev.3